JOURNAL OF APPLIED ELECTROCHEMISTRY 12 (1982) 205–211

An approximate economic evaluation of three-dimensional chemically modified electrodes

D. A. COX, R. E. W. JANSSON*

Chemistry Department, The University, Southampton, UK

Received 27 April 1981

A mathematical analogue based on an array of transmission lines has been used to predict the performance of chemically modified three-dimensional electrodes under typical conditions. Even for reactions with low exchange currents, considerable non-uniformity of activation is predicted in the direction of current flow so that the electrode cannot be scaled-up indefinitely in this direction without penalty. At the same time the conversion per pass of the electrode is so low that it can be considered to be a constant concentration system. An approximate economic forecast based on the results of the model suggests production costs of the order of \$500 to \$5000 kg^{-1} for a product of molecular weight 200, depending on the thickness of the electrode and the maximum permissible overvoltage. Installed capital costs are estimated to total about \$100 000 for a capacity of 20 to 170 $kg^{-1}y^{-1}$, also depending on the maximum permissible overvoltage.

1. Introduction

In recent years chemically modified electrodes have been the subject of many fundamental studies [1–13], but little attention has been paid to the possible engineering design of systems using such electrodes. Usually a chemically active group is bound to the surface of a conducting substrate such as carbon, often with the intermediacy of a silane or amide link, so that the number density of the active groups is less than the number density of atoms in the surface of the substrate. Even at monolayer coverage, therefore, the number of active sites per unit area may be relatively small, particularly if the active molecules are large, such as porphyrins. Since, in addition, the exchange current densities of the reactions of interest are often low, in commercial syntheses exploiting modified electrodes it would be necessary to use substrates of very large specific surface areas, i.e. three-dimensional electrodes. The question then arises as to how far the electrode can be scaled-up economically in the direction of the current flow.

To a first approximation the potential distribution through a porous electrode depends on the resistivities of the solid and solution phases and the current flowing; the more dissimilar the resistivities and the higher the current the more non-uniform the potential distribution. At first sight, the low current densities of modified electrodes suggest that the electrode should approach perfect polarization (i.e. uniform potential distribution), however, it is the current, not the current density, which determines the potential distribution. Therefore, the electrode cannot be made very large in the direction of current flow without there being a significant variation in overpotential, which is undesirable if the specificity of the modified electrode is to be maintained. Calculations have been carried out using a mathematical model of a three-dimensional electrode and conditions typical of work on modified electrodes in order to provide representative data for an approximate economic evaluation of such cells. No attempt has been made to model a particular reaction, the aim being rather to obtain typical magnitudes of design variables as a starting point for further engineering studies. For the sake of simplicity and generality it has been assumed that the overall rate of reaction is given by a Butler–Volmer type of relationship, which strictly is applicable only to an elementary reaction. Coupling with reactions in the homogeneous phase and adsorption have been ignored, although both may be important in real cases.

* Present address: Monsanto Co., 800 N. Lindbergh Blvd. St. Louis, Mo, USA.

0021–891X/82/020205–07\$02.70/0 © 1982 Chapman and Hall Ltd.

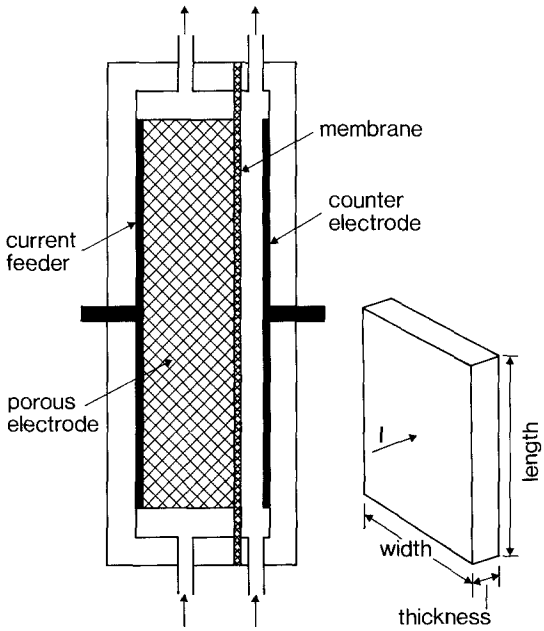

Fig. 1. Conceptual cell with three-dimensional chemically modified electrode.

2. Mathematical model

The analogue was developed initially by McKubre *et al.* [14, 15], following the work of Daniel 'Bek [16], and modified by Cox [17]. Basically it treats a three-dimensional electrode (which normally is relatively thin in the direction of current flow, Fig. 1) as a two-dimensional array of transmission lines, each line consisting of a string of resistor/capacitor networks after the fashion of Randles [18], to represent a spatially distributed electrochemical reaction (Fig. 2). Current flow is along each of the transmission lines. Variations in the third orthogonal direction (Fig. 1) are ignored i.e. it is assumed the electrode can be scaled-up freely in this direction. The ends of the transmission lines correspond to the face of the bed remote from the feeder (i.e. normally adjacent to the membrane/divider) and can be treated as an equipotential surface, or a voltage gradient can be imposed to simulate the iR effects caused by the non-uniform distribution of current density in the direction of fluid flow. With given boundary conditions Kirchhoff's laws can be applied to the array of meshes to give the distribution of current, voltage and concentration within the electrode. The following are the requisite equations:

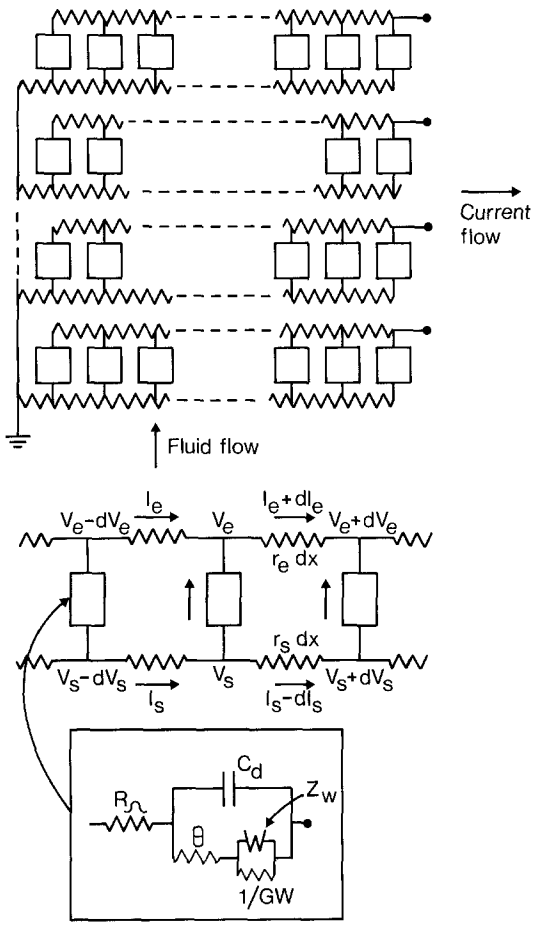

Fig. 2. Pseudo-two-dimensional mathematical model based on an array of transmission lines.

$$\eta(i,j) = V_s(i,j) - V_e(i,j) - V_{eq} \quad (1)$$

$$I_e(i,j) + I_s(i,j) = I_{total,j} \quad (2)$$

$$V_e(i,j) = r_e \sum_{m=1}^{i} I_e(m,j) \quad (3)$$

and

$$I_e(i,j) = \sum_{m=1}^{i} I_r(m,j) \quad (4)$$

where I_e and V_e are the current and potential in the electrolyte and I_s and V_s are the values in the solid at element i in transmission line j. V_{eq} is the rest potential for the reaction of interest. Since, as will be shown below, the conversion of reactant is extremely small in a single pass, to a first approximation V_{eq} can be considered constant throughout the electrode.

As in general $\eta(i, j)$ may vary from zero to some large value, a Butler–Volmer type equation is used to determine the local current density up to the diffusion limit. $I_r(i, j)$ is then given by either

$$I_r(i, j) = Ai_0 \left[\exp\left(\frac{\alpha nF\eta(i, j)}{RT}\right) - \exp\left(\frac{\beta nF\eta(i, j)}{RT}\right)\right] \quad (5)$$

where $i_0 = {}^{\ominus}i_0 c^{\alpha}_{\text{react}} c^{\beta}_{\text{prod}}$, or

$$I_r(i, j) = nFAk_M c_{i,j} \quad (6)$$

whichever is the smaller. Again since the concentration of reactant and product can be considered constant throughout the electrode, i_0 to a first approximation can be considered to be constant. As η generally increases in the direction of current flow the assumption that either Equation 5 or Equation 6 is operative means that there may be a 'corner' in the calculated current distribution [14, 15, 17] if the electrode passes from kinetic to mass transfer control, i.e. for simplicity there is assumed to be no region of mixed control.

The numerical values for $I_r(i, j)$, $\eta(i, j)$ and $c(i, j)$ are obtained by iteration as follows. A value of the total current ($I_{\text{total},1} = I$) is assumed for the first row ($j = 1$) of the array of transmission lines and values of $I_r(i, 1)$ guessed successively. For the first row the concentration is merely the inlet concentration and Equations 1–4 give the corresponding values of $\eta(i, 1)$ and $I_s(i, 1)$. The values of $I_r(i, 1)$ are then improved iteratively with the knowledge that

$$\sum_{i=1}^{l} I_r(i, 1) = I \quad (7)$$

and the imposition of some limit $\eta = \eta_{\max}$ at the end of the transmission line. The elements in subsequent rows j are treated similarly but with

$$c(i, j) = c(i, j-1) - I_r(i, j-1)/nFu \quad (8)$$

where u is the electrolyte velocity (plug flow is assumed), $I_r(i, j)$ being given either by Equation 5 or 6. Finally, the total electrode current is given by

$$I_{\text{electrode}} = \sum_{j=1}^{n} I_{(\text{total}, j)} \quad (9)$$

and if this is not the desired current the process is initiated anew with a revised value of $I_{\text{total},1}$. Usually only 3 or 4 iterations are needed to obtain convergence.

In the present calculations the surface of the electrode adjacent to the membrane was assumed to be an equipotential

$$V_e(l, j) = V_e(l, 1) \quad (10)$$

but other cases can be accommodated, for example if $I_{(\text{total}, j)}$ varies significantly with j, so that the iR drop between the working electrode and secondary electrode also varies significantly with j. This and other cases have been discussed elsewhere [14, 15, 17]. If allowance is made for the spatial distribution of iR drop between the electrode and the counter electrode then the calculation is also dependent on the position of the reference electrode; in this work it was assumed to be adjacent to the membrane at the downstream end of the electrode (Fig. 1).

3. Calculations

The range of parameters used are shown in Table 1. Since the program calls for an electrode of finite width, 5 cm was specified, making the area in the direction of current flow 250 or 500 cm^2, and the area in the direction of fluid flow 10 cm^2, but the results are either independent of the width (e.g. conversion) or can be scaled linearly (e.g. total current) since the model is pseudo-two-dimensional. The results are given, therefore, in terms of current per unit width of electrode (Fig. 1). Other variables are based on the conditions of Daum and Murray [12], who reported surface coverages in the range 2–10 x 10^{-9} mol cm^{-2}, which makes the effective area of the electrode approximately 0.1 to 0.6 times the geometric area of the substrate. Since the mass transfer coefficient under the assumed conditions is [17] about 10^{-3} cm s^{-1}, and the specific surface area of reticulated vitreous carbon can be as high as 80 cm^{-1}, the product $k_M A$ in Equation 6 is about 0.008–0.048 s^{-1} allowing for the fractional coverage; values of 0.015 and 0.048 s^{-1} were taken as being representative. Daum and Murray [12] used aqueous 0.1 M $LiClO_4$ as supporting electrolyte; this has a resistivity of 112.9 Ω cm, so values of 100, 50 and 10 Ω cm were assumed in the calculations. More dilute solutions, or the use of non-aqueous systems, would lead to a higher

Table 1. Input parameters for calculations

Parameter	*Value*
Height	50 or 100 cm
Width	5 cm
Thickness	2, 4, 6, 8, 10 cm
Specific surface area	80 $cm^2\ cm^{-3}$
Volumetric flow	600 $cm^3\ min^{-1}$ = 1 $cm^3\ min^{-1}\ cm^{-2}$ of cross-section
$k_M A$	0.048, 0.015 $cm^3\ s^{-1}$
Resistivity of matrix, ρ_M	0, 10^{-3}, 1.0 Ω cm
Resistivity of solution, ρ_s	10, 50, 100 Ω cm
Concentration electroactive species (at inlet)	0.1, 0 001 mol dm^{-3}
Exchange current density, $^{\ominus}i_0$	100 μA cm^{-2}
Maximum allowable value of overpotential	50, 100, 150, 200 mV

resistivity solution, ρ_s, and, therefore, a more non-uniform potential distribution, so these cases have not been considered here. The resistivity of the electrode substrate (e.g. carbon foam) is usually very small so that relative to the solution the matrix can be considered to be a perfect conductor, ($\rho_M = 0$) but values of 10^{-3} and 1 Ω cm have also been considered. Exchange current densities are usually not quoted in work on modified electrodes, but from published voltammograms clearly they are low; a value of 100 μA cm^{-2} has been assumed here as representative of the upper end of the scale. Larger values would lead to the gross maldistribution of potential seen in metal deposition and high rate organic reactions, a condition already dealt with extensively in the engineering literature [19, 20], whereas smaller values would lead to even higher production costs. To maintain the assumed selectivity of the electrode the maximum overpotential was limited to 50, 100, 150 or 200 mV. The data derived were used in a rough economic forecast, as discussed below.

4. Results and discussion

Fig. 3 shows plots for current density, potential and concentration in a 2 cm thick bed 50 cm long with a maximum permissible overpotential of 200 mV. Clearly, even though the membrane current density is only 1.28 mA cm^{-2}, the polarization is far from uniform. However, the concentration is nearly constant, the only significant depletion taking place near the top of the electrode adjacent to the membrane. For lower maximum permissible overvoltages the distributions are more uniform but essentially similar.

The results show that the distributions are insensitive to ρ_M over the range studied, but that I_{TOT} is inversely proportional to ρ_s (Table 2). Also under the assumed conditions there is very little evidence of diffusion control, therefore, the total current is insensitive to flow rate, although the conversion obtained (note, only a fraction of 1%) is inversely proportional to flow rate (Table 2).

Fig. 4 shows the variation of total current per cm width with increasing thickness in the direction of current flow. Interestingly it attains a maximum at about 5 cm (under these conditions) and then the total current actually declines with increasing thickness particularly at high overpotentials. This is because the part of the electrode near the feeder contributes very little to the total current (see Fig. 3) but resistive losses are incurred.

Based on these results a rough forecast can be made of the capital and process costs associated with using modified electrodes to make fine chemicals. It is assumed that the molecular weight of the product is 200 (simple molecules are not likely to have enough added value) and that two electrons are consumed per mol produced. The production rates of single electrodes 1 m × 0.5 m × n cm are shown in Table 3, and estimated production costs in Fig. 5. Estimated capital costs are shown in Table 4. By comparison with other sys-

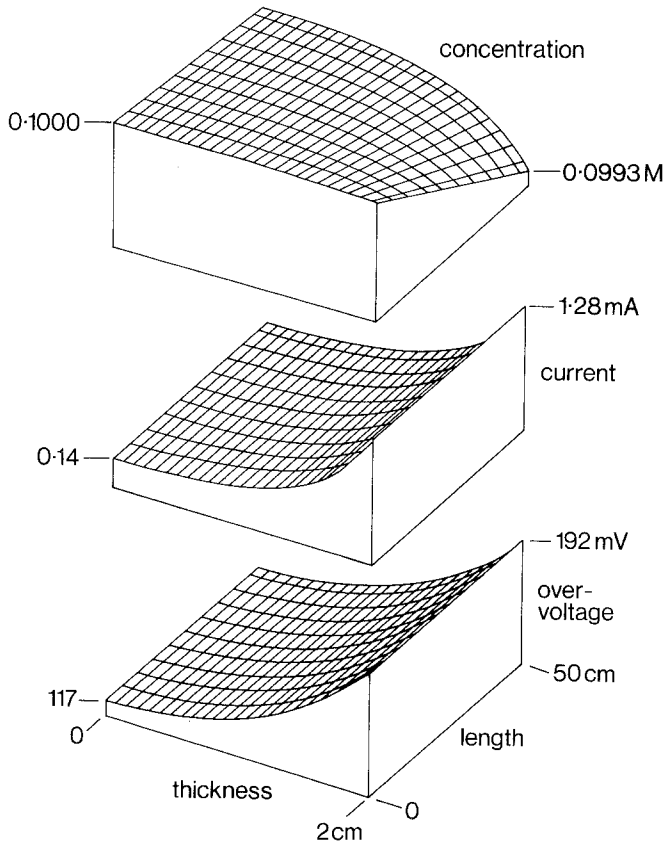

Fig. 3. Current per unit cross-sectional area in the fluid phase, overpotential and concentration in a 2 cm × 50 cm pseudo-two-dimensional electrode.

Table 2. Summary of results for an electrode 50 cm high × 5 cm wide × 2 cm thick ($\eta_{max} = 50\,mV$)

ρ_m (Ω cm)	ρ_s (Ω cm)	c_{in} (mol dm^{-3})	$^{\ominus}i_0$ (μA cm^{-2})	*flowrate* (cm^3 min^{-1})	$k_M A$ (cm^3 s^{-1})	I_{TOT} (mA)	*Conversion per pass (%) (2e process)*
0	100	0.1	100	600	0.048	29.4	0.015
	50					32.3	0.017
	10					35.3	0.018
10^{-3}	100					29.3	0.015
	50					32.3	0.017
	10					35.5	0.018
1.0	100					29.3	0.015
	50					32.2	0.017
	10					35.2	0.018
0	100	0.1	100	60	0.015	29.3	0.150
	50					32.2	0.164
	10					35.3	0.180
10^{-3}	100					29.3	0.150
	50					32.2	0.164
	10					35.3	0.180
1.0	100					29.3	0.150
	50					32.2	0.164
	10					35.2	0.180
1	10	0.001	100	600	0.048	3.6	0.184
				60	0.015	3.6	1.824

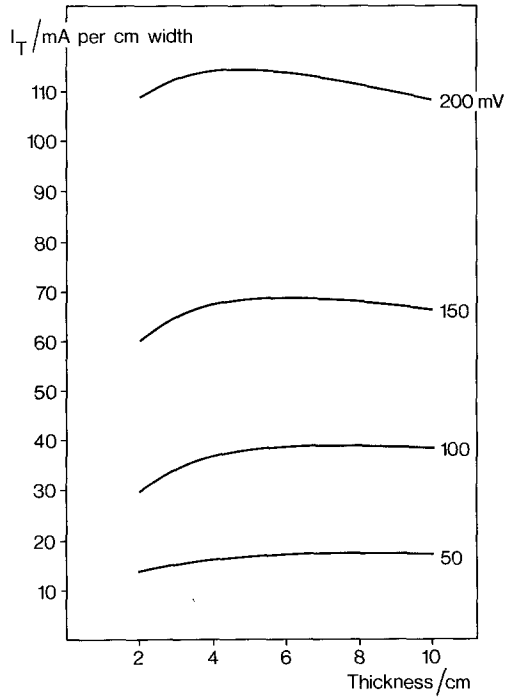

Fig. 4. Total current per cm width versus thickness at various maximum permissible overpotentials.

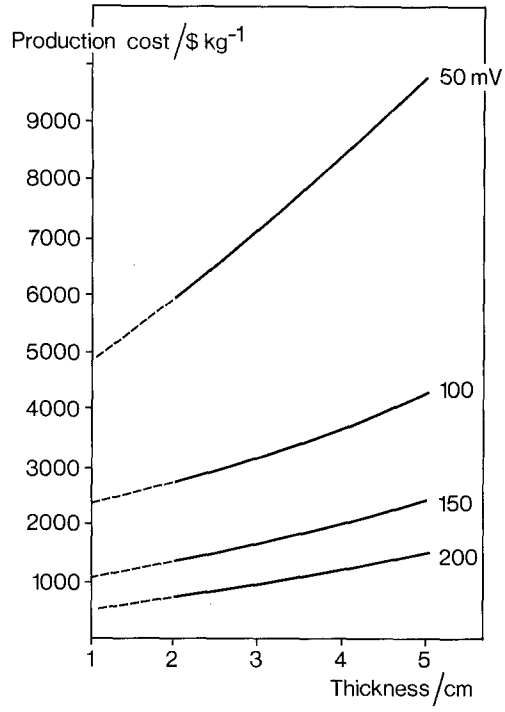

Fig. 5. Estimated total production cost of a product (MW = 200) as a function of electrode thickness and maximum permissible overpotential.

tems it has been assumed that the cell capital is 42% of the total investment, that the annual capital charges (return on investment, depreciation and tax) are 40% of the invested capital and that capital charges represent 33% of the total production cost [21, 22]. Because of the arbitrary nature of these assumptions the absolute values may be in error (in particular no replacement cost for the modifier can be assigned without knowledge of the electrode lifetime), however, the trends in Fig. 5 are representative and the values can be re-scaled easily in the light of experience.

Table 3. Production rates (kg y^{-1}) from a single porous electrode, 1 m × 0.5 m × n cm. Molecular weight of product: 200 g; 2 electron process; 8000 h

η_{max} (mV)	*Thickness* (cm)		
	2	4	5
200	162.3	170.1	170.1
150	89.3	101.2	103.0
100	44.3	55.5	57.3
50	20.5	24.2	25.4

Clearly there is no economic advantage in making the electrode thicker than 2 cm, but there are great benefits if the modified surface can tolerate overpotentials as high as 200 mV without loss of selectivity. If the exchange current density is as high as 100 μA cm^{-2} (as assumed here) then Fig. 5 suggests that special chemicals can be made for about $750 per kg, possibly less (e.g. by extrapolation about $500 per kg at 1 cm thickness). The typical error range in the estimate is from about + 62% (hard separation, high running cost; cell capital 34% of total, capital charges 25% of running cost) to − 31% (easy separation, low running costs; cell capital 50% of total, capital charges 40% of running cost), so the production cost could lie in the range $345–810 per kg for a 1 cm electrode, with the upper end the more likely.

The total production can be increased by scaling by number with many cells in a stack. A lower exchange current than 100 μA cm^{-2} will push costs higher, roughly in inverse proportion, so chemicals produced in low current density reactions which need close potential control ($\Delta\eta < 50$ mV) could easily cost $10 per gram.

Table 4. Estimated capital and production costs of a chemical of molecular weight 200 g

	Electrode thickness (cm)		
	2	4	5
Electrode at 50 ¢ cm^{-3}	5 000	10 000	12 500
Membrane	300	300	300
Cell body	600	600	600
Counter electrode	400	400	400
Structure	1 000	1 000	1 000
	$7 300	$12 300	$14 500
Undeveloped design, 15%	1 095	1 845	2 220
Cell capital	8 395	14 145	17 020
Installed cell capital (× 5)	41 975	70 725	85 100
Approximate total investment (cell capital/0.42)	100 000	168 000	203 000
Cap charges at 40%	40 000	67 200	81 200
Approximate total production cost (capital charges/0.33)	121 000	204 000	246 000

Such high value chemicals would probably only be needed in small quantity, so a single porous electrode might satisfy the demand (Table 3).

In these calculations no account has been taken of electrode lifetime, which is a major problem with modified electrodes, but if this can be improved it is clear that there are no fundamental difficulties in engineering systems to produce high value chemicals at rates of tonnes per year.

References

[1] B. F. Watkins, F. R. Behling, E. Kariv and L. L. Miller, *JACS* 97 (1975) 3549.

[2] B. E. Firth, L. L. Miller, M. Mitani, T. E. Rogers, J. Lennox and R. W. Murray, *JACS* **98** (1976) 8271.

[3] M. Fujihara, T. Matsue and T. Osa, *Chem. Lett.* (1976) 875.

[4] T. Osa and M. Fujihara, *Nature* **264** (1976) 349.

[5] P. R. Moses and R. W. Murray, *JACS* 98 (1976) 7435.

[6] J. C. Lennox and R. W. Murray, *JACS* **100** (1978) 3710.

[7] J. C. Lennox and R. W. Murray, *J. Electroanal. Chem.* 78 (1977) 395.

[8] J. R. Lenhard, R. Rocklin, H. Abruna, K. Williams, K. Kuo, R. Nowak and R. W. Murray, *JACS* **100** (1978) 5213.

[9] M. S. Wrighton, M. C. Palozzotto, A. B. Bocarsly, J. M. Botts, A. B. Fischer and L. Najo, *JACS* **100** (1978) 7264.

[10] A. L. Aldred, C. Bradley and T. H. Newman, *JACS* **100** (1978) 5081.

[11] J. R. Lenhard and R. W. Murray, *JACS* **100** (1978) 7870.

[12] P. Daum and R. W. Murray, *J. Electroanal. Chem.* **103**, (1979) 284.

[13] N. Kobayashi, T. Matsue, M. Fujihara and T. Osa, *J. Electroanal. Chem.* **103** (1979) 427.

[14] M. C. H. McKubre, D. D. Macdonald, P. Wentreck and S. S. Wing, 'Electrochemical Removal of Dissolved Sulphide from Geothermal Fluids', final report to the Environmental Protection Agency under contract 67-03-2778 (1981).

[15] D. D. Macdonald and M. C. H. McKubre, 'Impedance Measurements in Electrochemical Systems', in 'Modern Aspects of Electrochemistry', Vol. 13, edited by J. O'M. Bockris (1981).

[16] B. S. Daniel 'Bek, *Zh. Fiz. Khim.* **22** (1948) 697.

[17] D. A. Cox, M. Phil. thesis, Southampton University (1981).

[18] J. E. B. Randles, *Disc. Farad. Soc.* **1** (1947) 11.

[19] J. S. Newman and W. Tiedemann, 'Advances in Electrochemistry and Electrochemical Engineering', Vol. 11, Wiley, New York (1978) p. 353.

[20] F. Goodridge and M. A. Hamilton, *Electrochim. Acta* **25** (1980) 481.

[21] R. E. W. Jansson, *Phil Trans. Roy. Soc. A* **A302** (1981) 285–295.

[22] R. E. W. Jansson, *J. Appl. Electrochem.* **12** (1982) 163.